6. Pipe Assembly

A: REMOVAL

1) Disconnect the ground cable from the battery.
2) Lift up the vehicle and remove the jack-up plate.

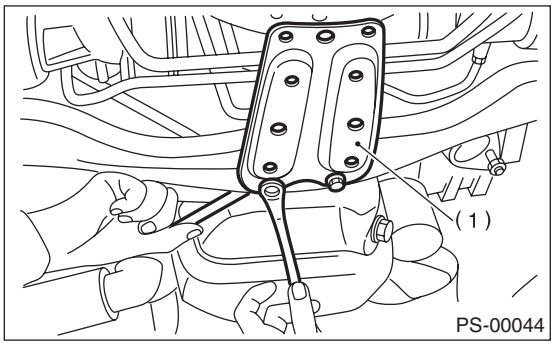

(1) Jack-up plate

3) Remove the one pipe joint at the center of the gearbox, and connect the vinyl hose to the pipe and the joint. Discharge the fluid by turning the steering wheel fully clockwise and counterclockwise. Discharge the fluid similarly from other pipes.

- Non-turbo model

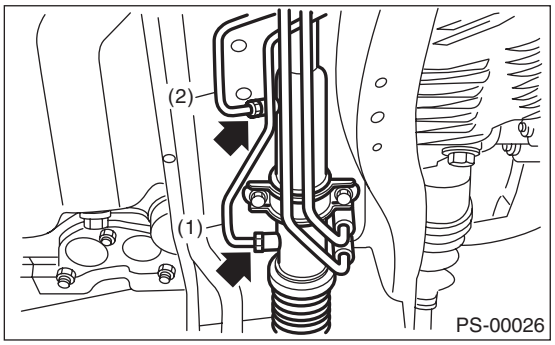

(1) Pipe A
(2) Pipe B

- Turbo model

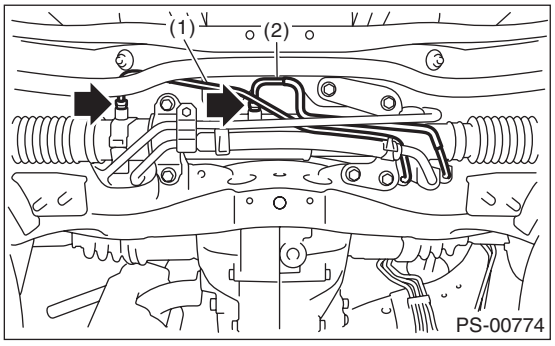

(1) Pipe A
(2) Pipe B

4) Remove the clamp E from pipe C and D.

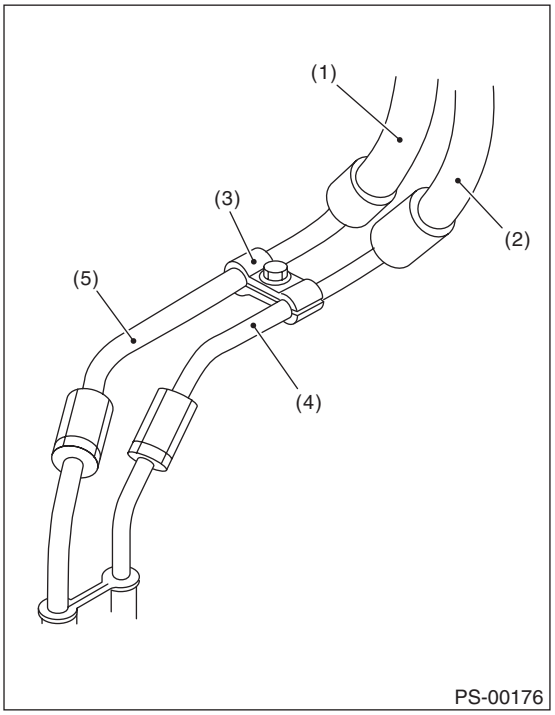

(1) Return hose
(2) Pressure hose
(3) Clamp E
(4) Pipe C
(5) Pipe D

5) Disconnect the pipe C and D from the gearbox.

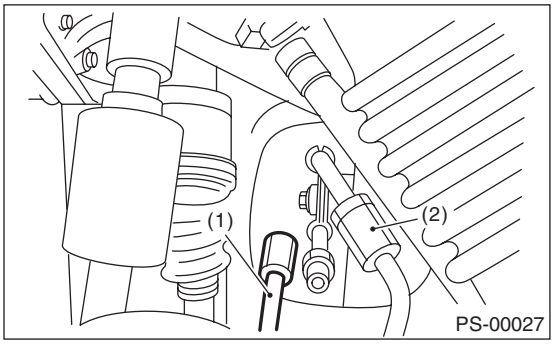

(1) Pipe C
(2) Pipe D

6) Non-turbo model
(1) Remove the air intake duct. <Ref. to IN(H4SO)-7, REMOVAL, Air Intake Duct.>
(2) Remove the bolt A.
(3) Disconnect the pipe C from oil pump. Disconnect the pipe D from the return hose.

CAUTION:
• Do not allow fluid to come into contact with the pulley belt.
• To prevent foreign matter from entering the hose and pipe, cover the open ends of them with clean cloth.

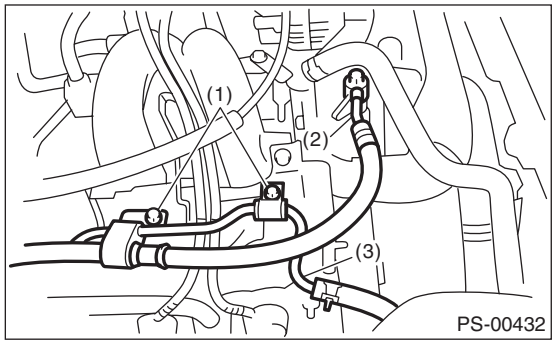

(1) Bolt A
(2) Pipe C
(3) Pipe D

7) Turbo model
(1) Remove the air cleaner.
<Ref. to IN(H4DOTC)-10, REMOVAL, Air Cleaner Case.>
(2) Remove the coolant filler tank.

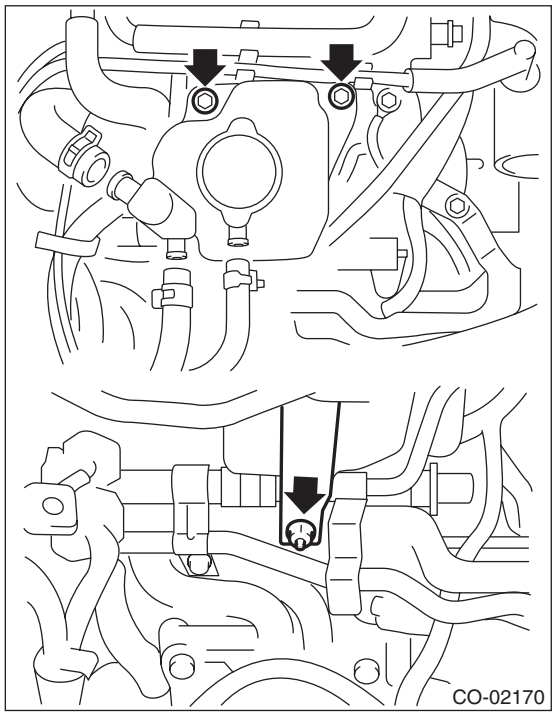

(3) Remove the two bolts (bolt A) holding the pipe C and D in place.
(4) Disconnect the pipe C from oil pump. Disconnect the pipe D from the return hose.

CAUTION:
• Do not allow fluid to come into contact with the pulley belt.
• To prevent foreign matter from entering the hose and pipe, cover the open ends of them with clean cloth.

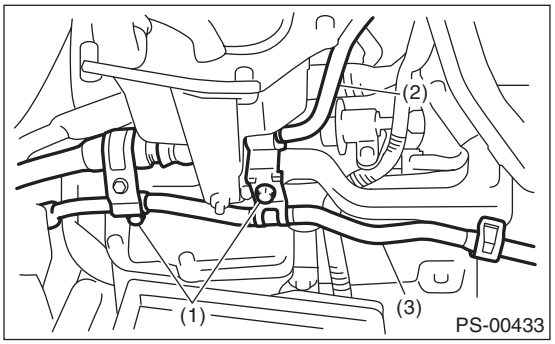

(1) Bolt A
(2) Pipe C
(3) Pipe D

B: INSTALLATION

1) Temporarily tighten the two bolts (bolts A) fixing pipe C and D in place.

NOTE:
Visually check that the hose between tank and pipe D is not bent or twisted.

• Non-turbo model

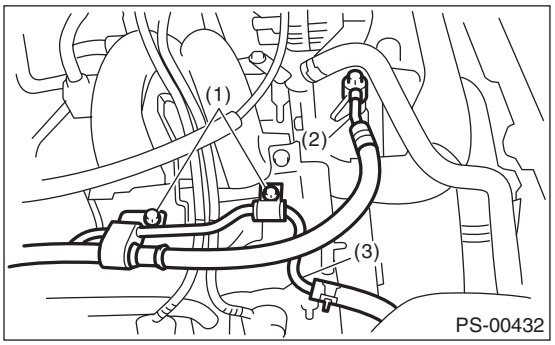

(1) Bolt A
(2) Pipe C
(3) Pipe D

- Turbo model

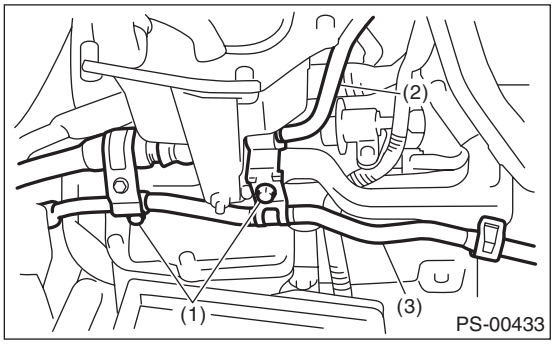

(1) Bolt A
(2) Pipe C
(3) Pipe D

(1) Connect pipe D to the oil tank.
(2) Install the pipe C to the oil pump using a new gasket.

Tightening torque:
40 N·m (4.1 kgf-m, 29.5 ft-lb)

(3) Tighten the two bolts (bolts A) fixing pipe C and D in place.

Tightening torque:
13 N·m (1.3 kgf-m, 9.4 ft-lb)

2) Install the coolant filler tank. (Turbo model)

Tightening torque:
T1: 16 N·m (1.6 kgf-m, 11.8 ft-lb)
T2: 13 N·m (1.3 kgf-m, 9.4 ft-lb)

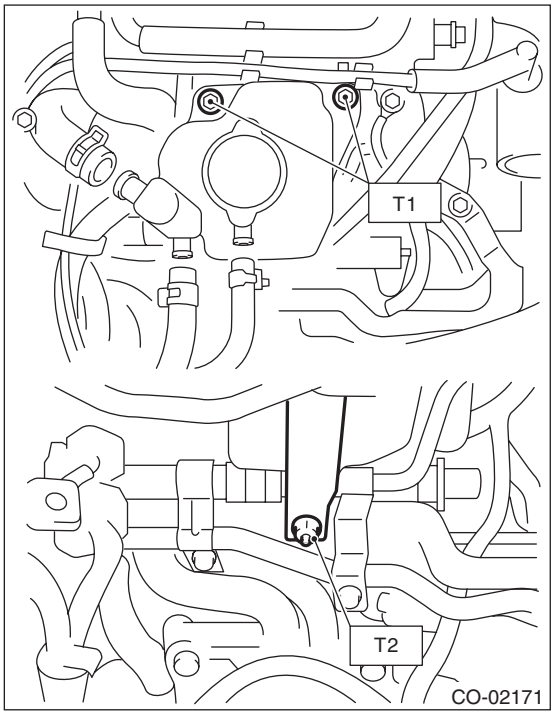

3) Temporarily connect the pipes C and D to the gearbox.

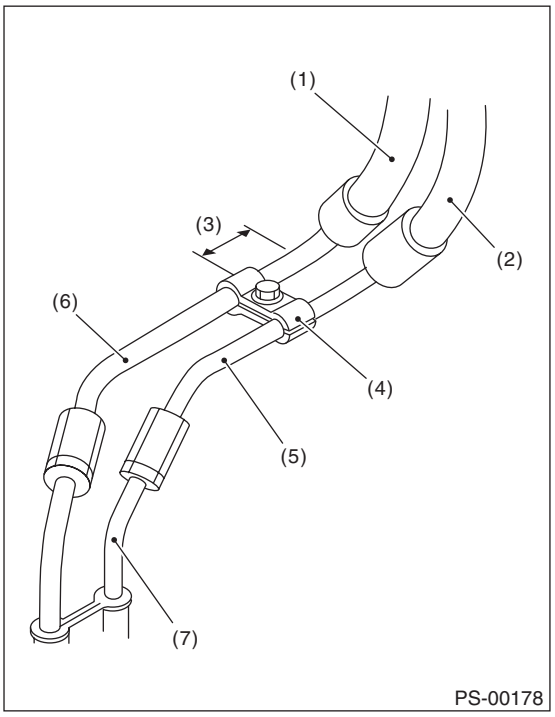

(1) Return hose
(2) Pressure hose
(3) Approx. 30 mm (1.18 in)
(4) Clamp E
(5) Pipe C
(6) Pipe D
(7) Pipe (gearbox side)

4) Temporarily tighten clamp E on pipes C and D.

NOTE:
Make sure that the character 8 on each clamp is positioned on the opposite side, as shown in the figure.

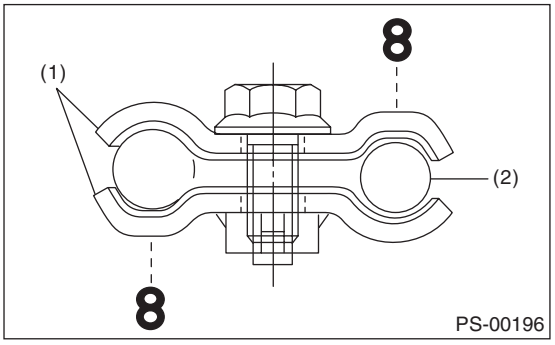

(1) Clamp E
(2) Pipe C

5) Tighten clamp E.

Tightening torque:
7.4 N·m (0.75 kgf-m, 5.4 ft-lb)

6) Tighten the joint nut.

Tightening torque:
15 N·m (1.5 kgf-m, 10.8 ft-lb)

7) Connect pipes A and B to the four pipe joints of the gearbox. Connect the upper pipe B first, and lower pipe A.

Tightening torque:

Non-turbo model:
13 N·m (1.3 kgf-m, 9.4 ft-lb)

Turbo model and STI model:
Housing side:
20 N·m (2.0 kgf-m, 14.5 ft-lb)
Cylinder side:
24 N·m (2.4 kgf-m, 17.4 ft-lb)

- Non-turbo model

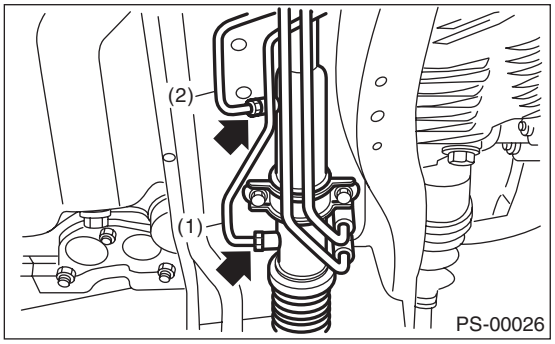

(1) Pipe A
(2) Pipe B

- Turbo model

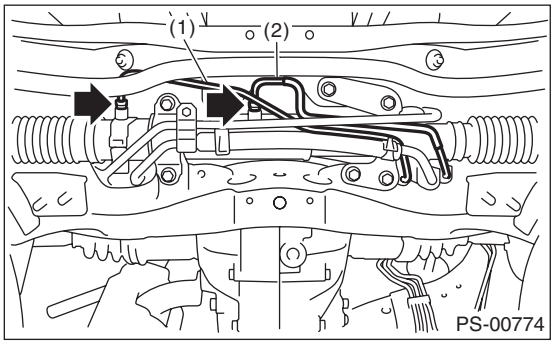

(1) Pipe A
(2) Pipe B

8) Install the jack-up plate.
9) Install the air intake duct. <Ref. to IN(H4SO)-7, INSTALLATION, Air Intake Duct.>
10) Install the air intake duct, the air cleaner upper cover and the air intake boot. <Ref. to IN(H4DOTC)-10, INSTALLATION, Air Cleaner Case.> <Ref. to IN(H4SO)-7, INSTALLATION, Air Intake Duct.>
11) Connect the ground cable to the battery.
12) Fill with the specified fluid.

CAUTION:
Never start the engine before feeding the fluid otherwise the vane pump might be seized.

13) Finally, check clearance between pipes or hoses as shown in the figure.
If the cruise control actuator and power steering hose clearance is less than 10 mm (0.39 in), move section (A) held in place by the clamp, or bend (B) to adjust.

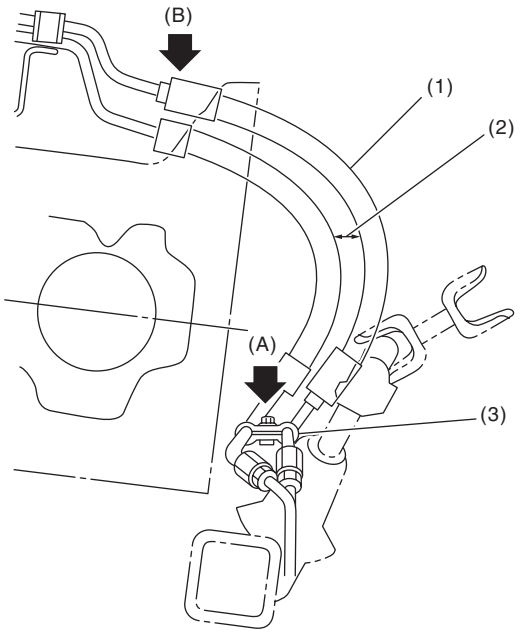

PS-00179

(1) High-pressure hose
(2) No interference is allowed between hoses.
(3) Crossmember to pipe clearance: 3 — 8 mm (0.12 — 0.31 in)

C: INSPECTION

Check all disassembled parts for wear, damage or other problems. Repair or replace the defective parts as necessary.

Part	Inspection	Corrective action
Pipe	• O-ring fitting surface damage • Nut damage • Pipe damage	Replace with a new part.
Clamp	• Loose clamps	Replace with a new part.
Hose	• Flare surface damage • Flare nut damage • Outer surface cracks • Outer surface wear • Clip damage • End coupling or adapter deformation	Replace with a new part.

CAUTION:
Although the surface layer materials of rubber hoses have excellent weathering resistance, heat resistance and resistance for low temperature brittleness, they are likely to be damaged chemically by brake fluid, battery electrolyte, engine oil and automatic transmission fluid and their service lives are to be very shortened. Wipe off hoses immediately if any of these come into contact with the hoses.
Since resistances for heat and low temperature brittleness gradually declines according to long periods of exposure to hot or cold conditions, and their service lives are shortening accordingly. It is necessary to perform careful inspection frequently when the vehicle is used in hot weather areas, cold weather areas and in frequent driving conditions where a lot of steering work is required.
Continuous discharge of the relief valve for 5 seconds or more will reduce the service lives of hoses, oil pump, fluid, etc., due to over heating.

Trouble	Possible cause	Corrective action
Pressure hose burst	Excessive holding time of relief status	Instruct customers.
	Malfunction of the relief valve	Replace the oil pump.
	Poor cold characteristic of fluid	Replace fluid.
Disconnection of the return hose	Improper connection	Repair.
	Loosening of the clip	Retighten.
	Poor cold characteristic of fluid	Replace fluid.
Fluid slightly leaking out of hose	Wrong piping layout and tension	Replace the hose.
	Excessive play of engine due to deterioration of engine mounting rubber	Replace the parts if defective.
	Improper stop position of pitching stopper	Replace the parts if defective.
Crack on hose	Excessive holding time of relief status	Replace. Instruct customers.
	Excessive tightening torque for return hose clip	Replace.
	Power steering fluid, brake fluid, engine oil, or electrolyte coming into contact with the hose surface	Replace. Be careful during service work.
	Too many uses in extremely cold weather	Replace. Instruct customers.

Pipe Assembly

NOTE:
There are conditions in which a fluid leak is diagnosed, but is not actually leaking. This is because the fluid spilt during the last maintenance was not completely wiped off. Be sure to wipe off spilt fluid thoroughly after maintenance.

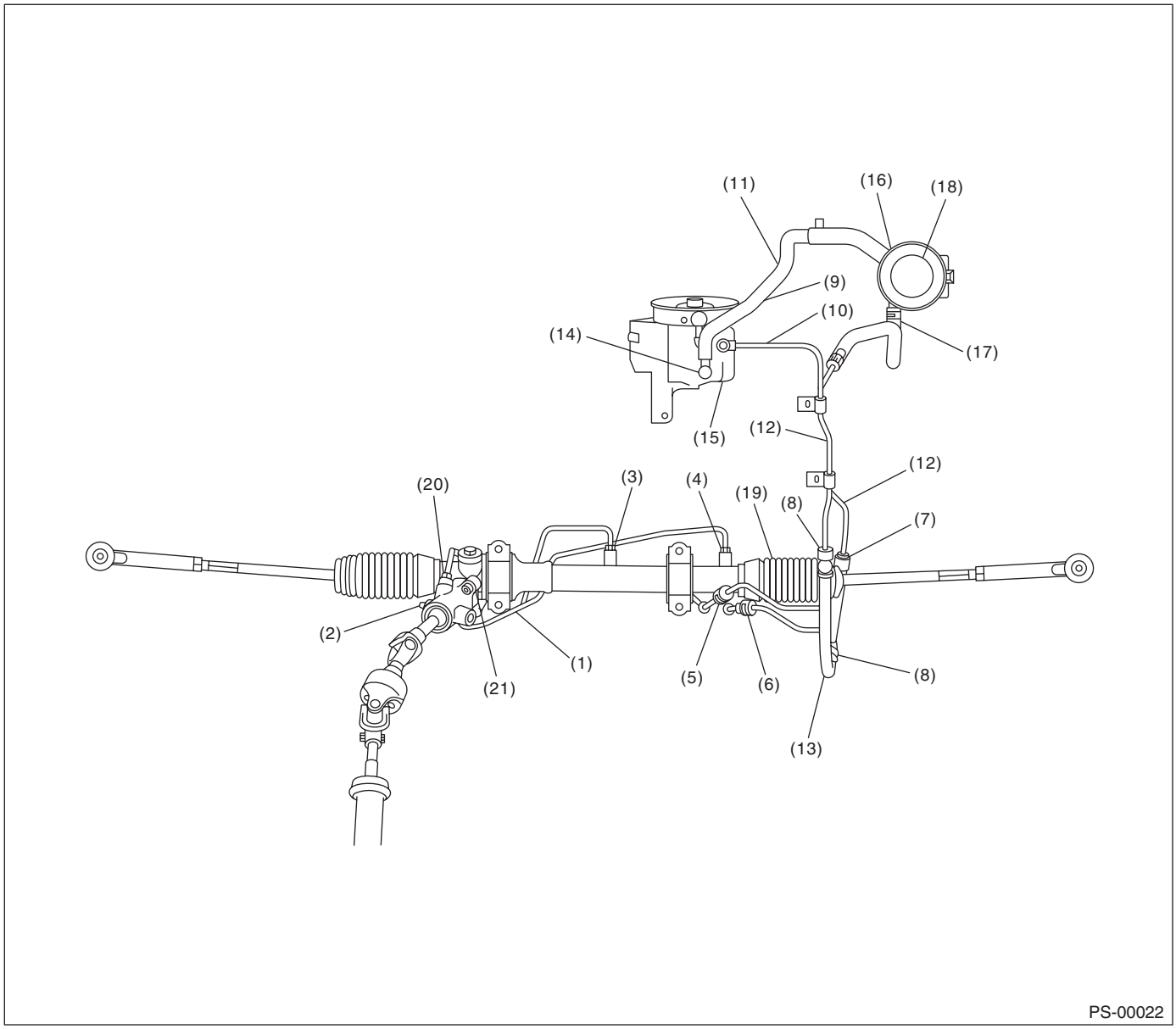

Fluid leaking area	Possible cause	Corrective action
Leakage from pipe and hose connections numbered with (1) through (10) in the figure	Insufficient tightening of flare nuts, dirt accumulation, damage to flare or flare nut or eye bolt	Loosen and retighten. Replace if ineffective.
	Improper installation of hose or clamp	Retighten or replace the clamp.
	Damaged O-ring or gasket	Replace the O-ring, gasket pipe or hose with new part, if still no improvement, replace the gearbox as well.
Leakage from hose (11), (12) and (13) in the figure	Crack or damage in hose	Replace with a new part.
	Crack or damage in hose hardware	Replace with a new part.
Leakage from surrounding of cast iron portion of oil pump, (14) and (15) in the figure	Damaged O-ring	Replace the oil pump.
	Damaged gasket	Replace the oil pump.
Leakage from oil tank, (16) and (17) in the figure	Crack in oil tank	Replace the oil tank.
Leakage from filler neck of (18)	Damaged cap gasket	Replace the cap.
	Crack in root of filler neck	Replace the oil tank.
	Fluid level too high	Adjust the fluid level.
Leakage from power cylinder of gearbox area (19) in the figure	Damaged oil seal	Replace the oil seal.
Leakage from (20), (21) in the figure and control valve of gearbox	Damaged gasket or oil seal	Replace the problem parts.
	Damage in control valve	Replace the control valve.